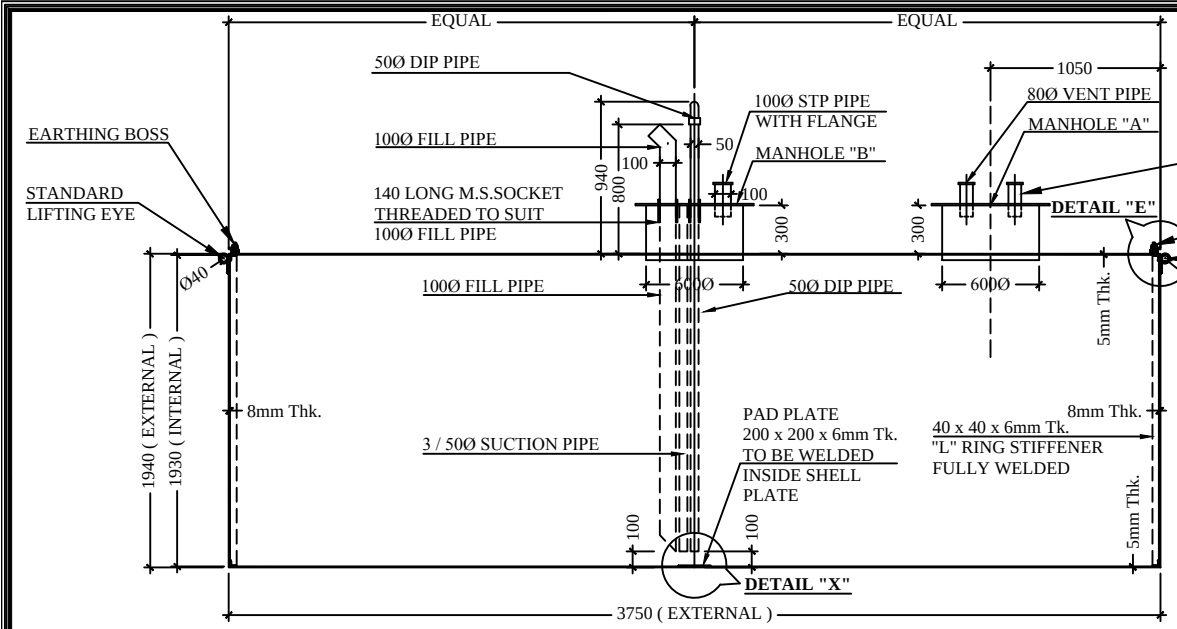

LONGITUDINAL ELEVATION SECTION

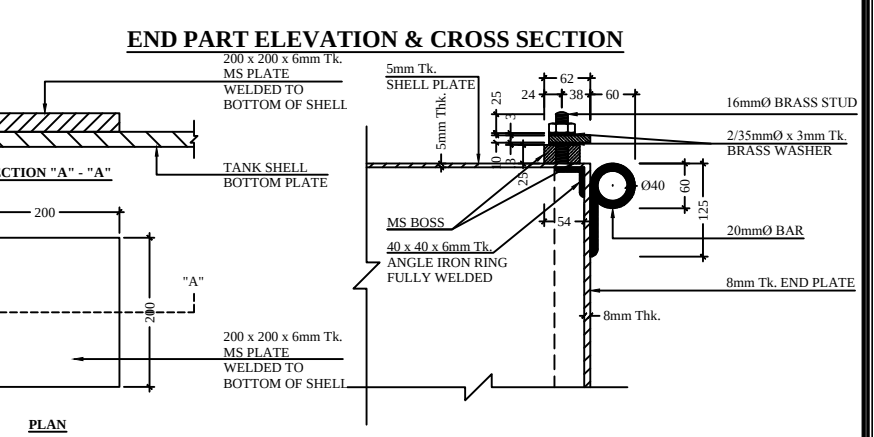

END PART ELEVATION & CROSS SECTION

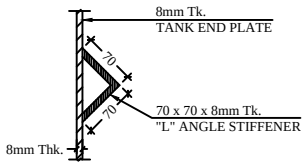

DETAIL OF STIFFENER FOR END PLATE

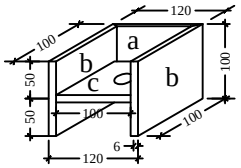

ISOMETRIC VIEW OF HOLDING DOWN BRACKET

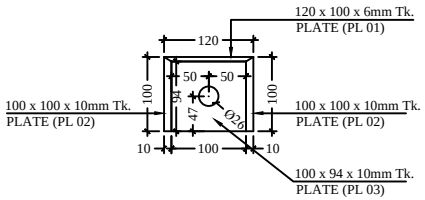

PLAN VIEW OF HOLDING DOWN BRACKET

NOTES

1. ALL DIMENSIONS ARE IN 'MM' UOS.
2. USE Fe 460 AND MIX 1:11/5:3 (20 MM) GRADE 25
3. USE MILD STEEL BARS FOR 6mmØ
4. DOPING THE UNDERSURFACE OF TANK SHALL BE DONE BEFORE POSITIONING IN PIT.
5. FILLING SHALL BE DONE ASPER SPECIFICATIONS.
6. THE EXPOSED ENDS OF PIPE FITTINGS SHALL BE COVERED TO PREVENT INGRESS OF BACK FILL TILL PIPELINE CONNECTIONS ARE MADE.
7. THE TANKS INSTALLED BUTNOT COMMISSIONED SHOULD BE KEPT FULL OF WATER AND COMMISSIONED TANKS SHOULD AS FAR AS POSSIBLE BE KEPT FULL
8. HOLDING DOWN POSITION SHALL BE ASPER TANK FABRICATION/ SITE CONDITION.
9. WHEREEVER NECESSARY MANHOLE SHOULD BE PROVIDED FOR SUCTION LINE,FILL LINE AND VENT LINE. THE NUMBER WILL VARY DEPENDING ON SITE CONDITION.
10. PROVIDE CLEAR COVER TO MAIN REINFORCEMENT
    a. 50MM

NOTE :-

*MS PLATE "a" - 120 x 100 x 6mm Tk.
*MS PLATE "b" - 100 x 100 x 10mm Tk.
*MS PLATE "c" - 100 x 94 x 10mm Tk.

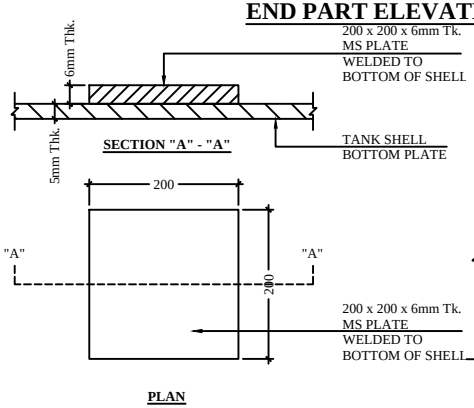

DETAIL "X"

DETAIL "E"

Lanka IOC PLC

FABRICATION DETAIL FOR 10KL TANKS

DRAWN BY :- F. C. P. D.	DATE :- 21.08.2025	SHEET NO :- 01	SEAL :-
SCALE :- N. S. T.	DRAWING NO :- LIOC/ENGG/TANK FAB/ 10KL - 01	REVISION :-	
CHECK AND VERIFIED :-	APPROVED :-		